INSTRUCTION SHEET

BER0056 – FRONT SUPPORT FOR LAWN DETHATCHING WHEELS

APPLICATION

Brooms: HB6032, HB7232, HB7232X, HB8432, HB8432XX, CBR6232, CBR7232, CBR8432.

NOTE: This Kit includes eight bolts, flat washers & nuts for a Dust Deflector installation (not included) when there is no Watering Kit.

INSTALLATION

1. **Figure 1:** Install the broom on the vehicle and raise it. Take off the two parking stands (item 4) by removing the bolts (item 1), the nuts (item 2) and the square wire lock pins (item 3).

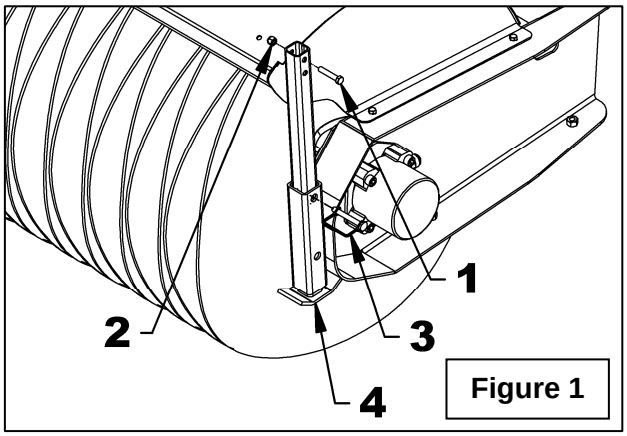

Figure 1

2. **Figure 2 – 84" broom:** Install the left and right wheel supports (items1-7) on the parking stand tubes (item 2) with two bolts (item 3), four flat washers (item 4), two lockwashers (item 5) and two nylon insert nuts (item 6). Insert the reinforcement tube (item 8) in the tube support (item 9) and secure with four bolts (item 3), eight flat washers (item 4), four lockwashers (item 5) and four nylon insert nuts (item 6). Attach the support tube (item 9), with the four holes toward the brushes, to the left and right wheel supports (items 1-7) with four bolts (item 3), eight flat washers (item 4), four lockwashers (item 5) and four nylon insert nuts (item 6).

<u>NOTE</u>: If the parking stand tubes don't have two holes (item 2) go to step 4 first.

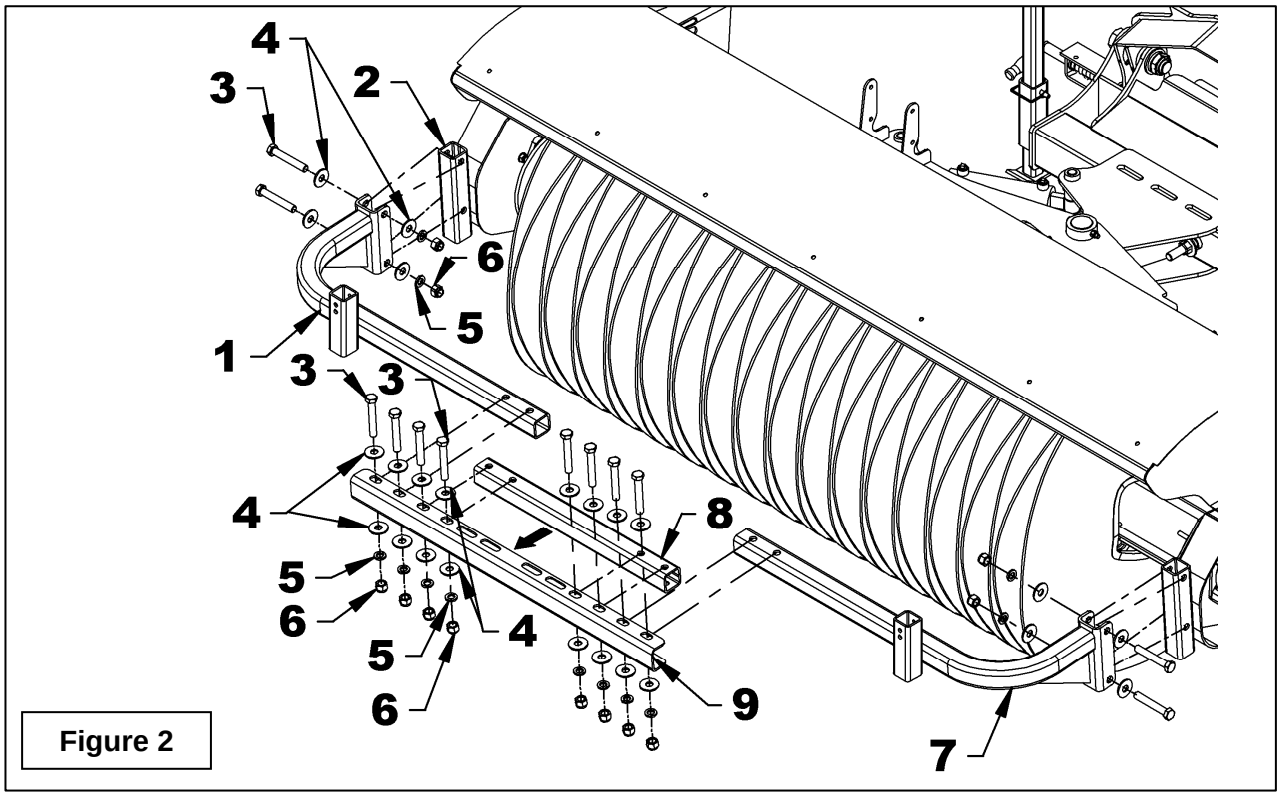

Figure 2

3. **Figure 3 – 60", 62" and 72" brooms:** Install the left and right wheel supports (items 1-7) on the parking stand tubes (item 2) with two bolts (item 3), four flat washers (item 4), two lockwashers (item 5) and two nylon insert nuts (item 6). Attach the support tube (item 8) to the right and left wheel supports (items 1-7) in the appropriate holes depending on the width of the broom (see figure) with four bolts (item 3), eight flat washers (item 4), four lockwashers (item 5) and four nylon insert nuts (item 6).

   NOTE: If the parking stand tubes don't have two holes (item 2) go to step 4 first.

   NOTE: The reinforcement tube (Fig. 2, item 8) is not required for the 60", 62" and 72" brooms.

4. **Figure 4:** If the parking stand tube only has one hole, drill the existing hole to a 21/32" diameter and drill the second Ø21/32" hole at 5 1/2" from the center and 1" from the edge of the tube as illustrated.

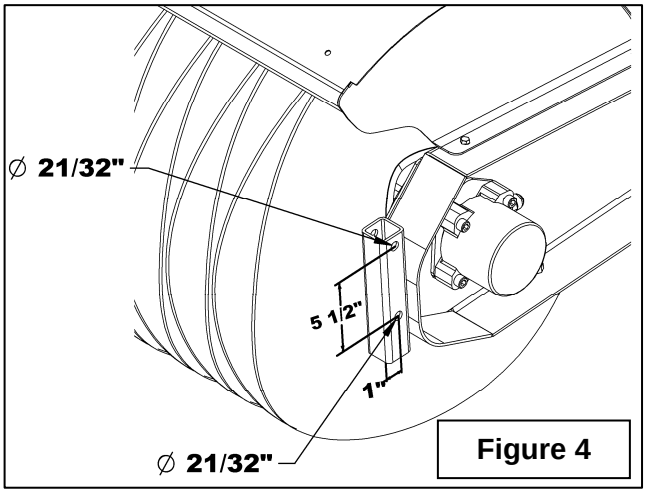

Figure 4

5. **Figure 5:** Install each dethatching wheel (item 1) in the support tubes (item 2) and lock in place with the square wire lock pins (item 3).

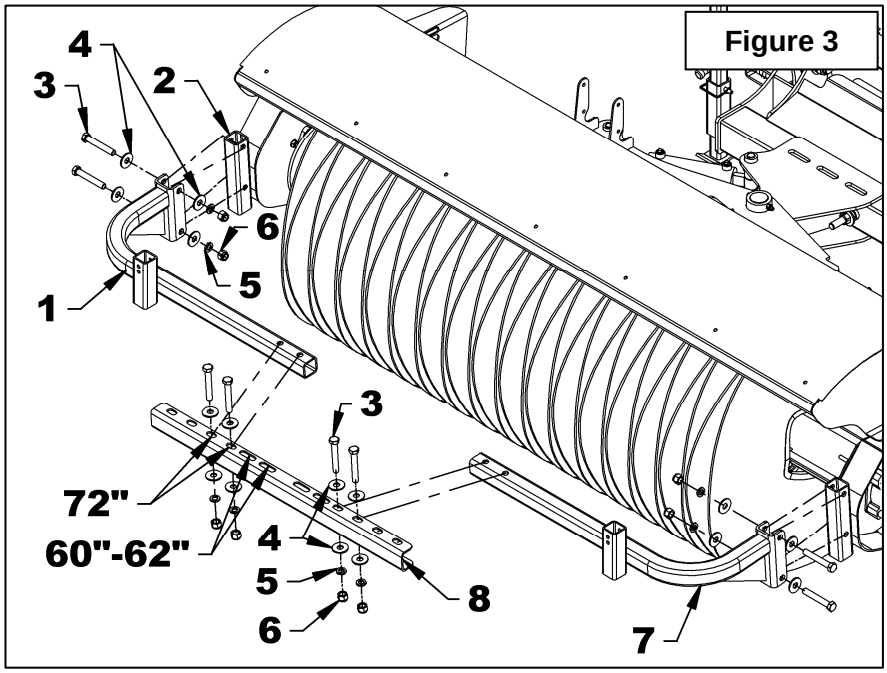

Figure 3

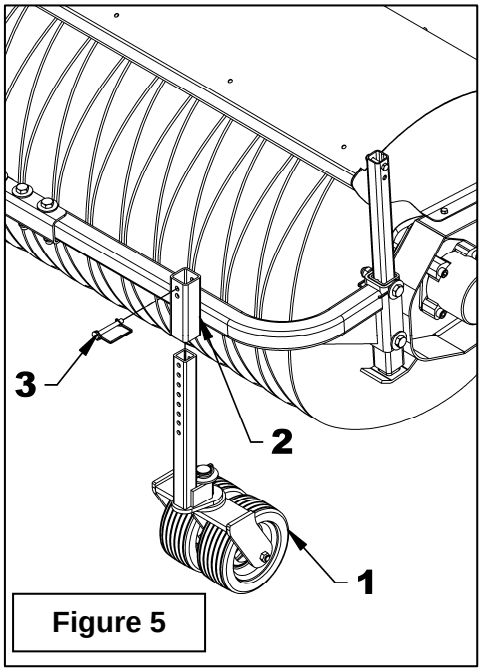

Figure 5

INSTRUCTION SHEET

BER0056 – FRONT SUPPORT FOR LAWN DETHATCHING WHEELS

PARTS

REF.	DESCRIPTION	QTY	PART#
1	Bolt ø5/8"NC x 4" lg., PTD	12	O/L
2	Flat washer 5/8" (ø11/16" int) PTD	24	O/L
3	Lockwasher ø5/8" PTD	12	O/L
4	Nylon insert nut 5/8" NC, PTD	12	O/L
5	Wheel support - RH	1	669099
6	Wheel support - LH	1	669100
7	Reinforcement tube	1	669483
8	Tube support	1	669101
9	Knurled clinch nut 5/16" 0.150 A 0.312" thickness	12	2401011
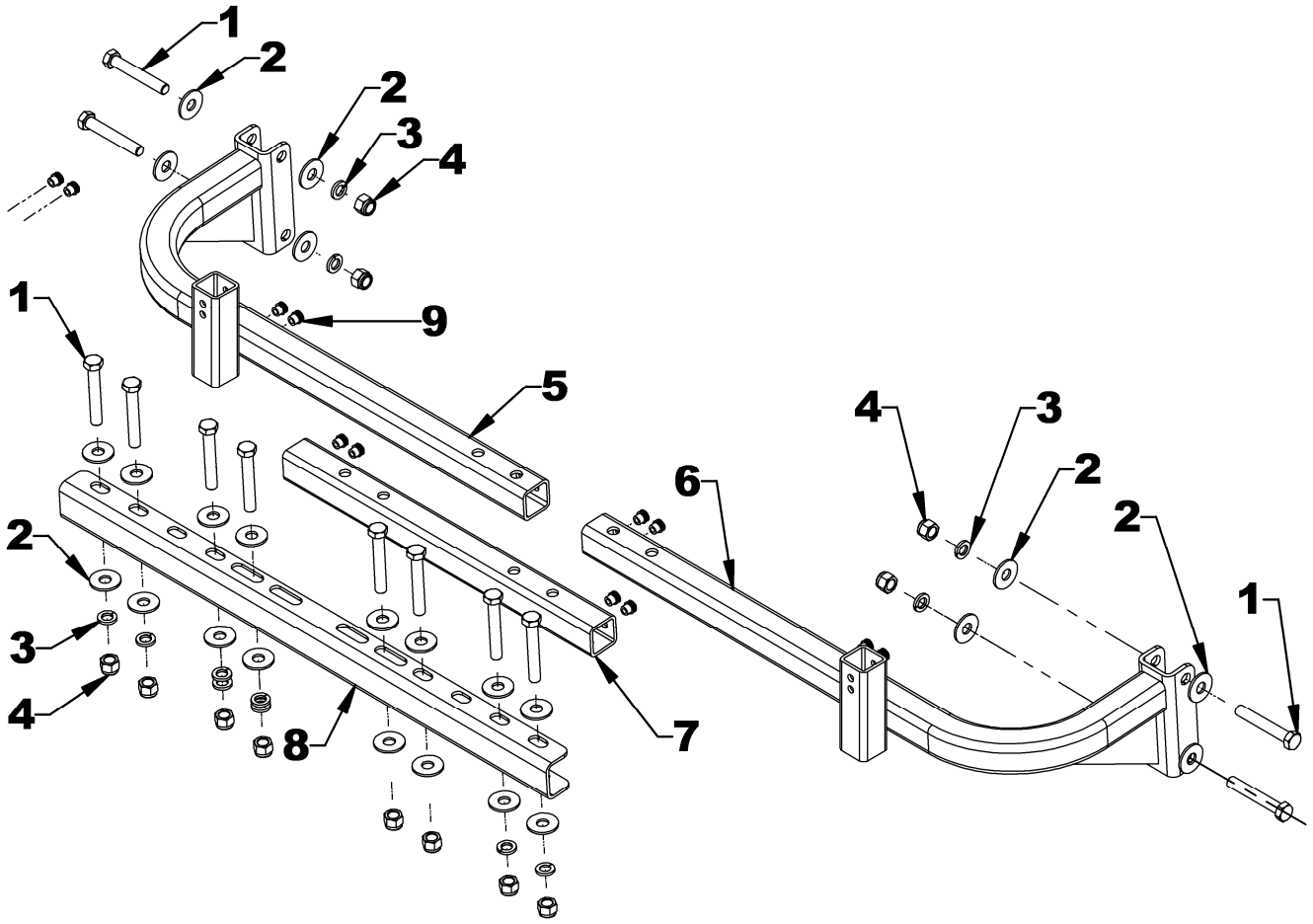
O/L – Obtain Locally